TOLERANCES
UNLESS OTHERWISE SPECIFIED :±0.5

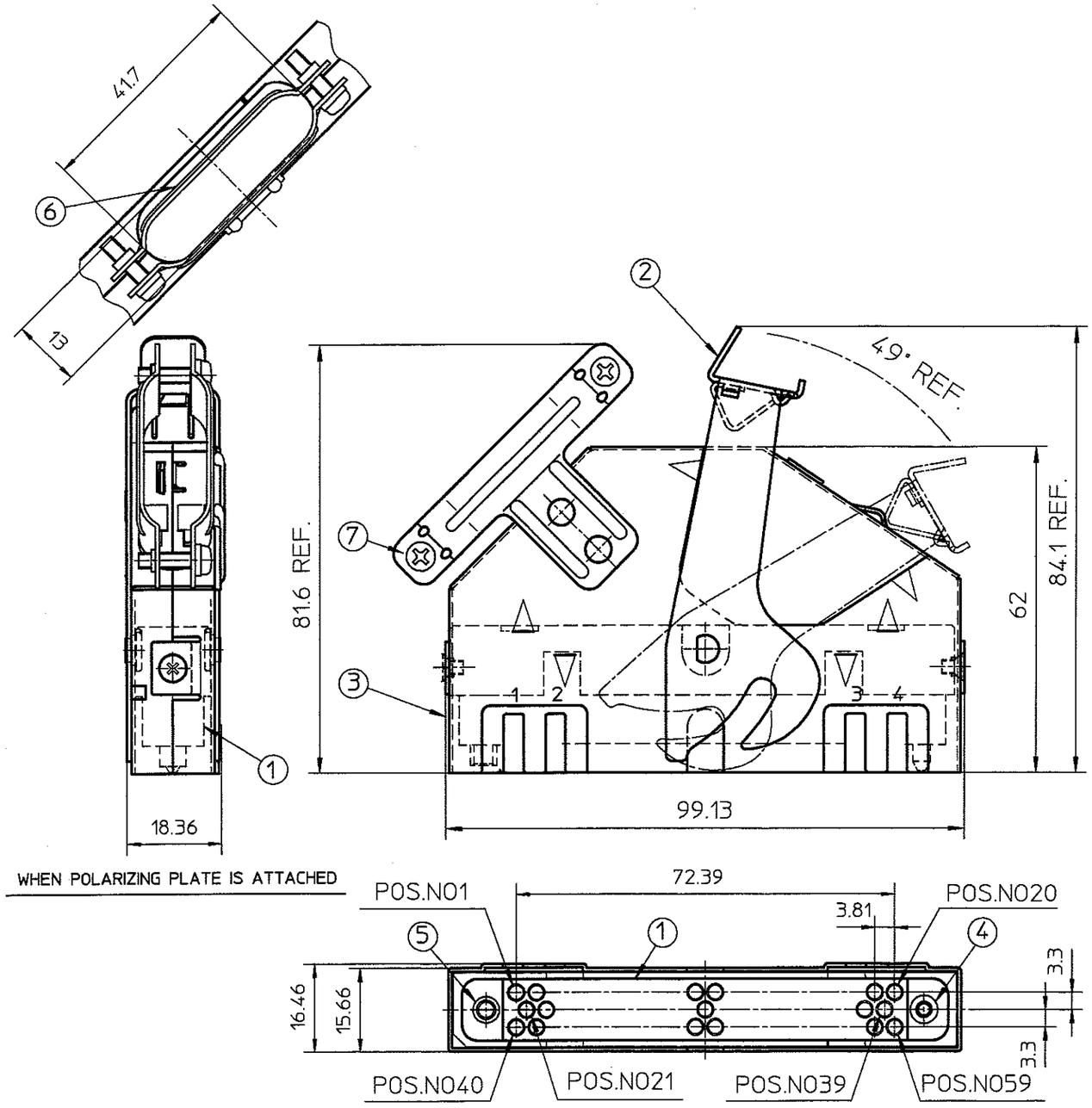

PT. NO.	PARTS NAME	MATERIAL	Q'TY	NOTE
1	INSULATOR	PBT RESIN GLASS REINFORCED	1	COLOR : BLACK
2	LEVER	STAINLESS	1	
3	HOOD	STEEL	2	FINISH : NICKEL PLATING
4	GUIDE PIN	STAINLESS	1	
5	GUIDE SOCKET	STAINLESS	1	
6	CABLE CLAMP BAR	STEEL	1	FINISH : NICKEL PLATING
7	SCREWING SCREW	STEEL	2	SCREW SIZE : M3X12

SOURIAU Japan

REV.	DATE	DESCRIPTION		CKD.
2	'98-12-7	SHAPE CHANGED	T.H.	H.T.
1	'94-6-7	SHAPE CHANGED	S.O	H.T

REFERENCE

SCALE	~
DIM. IN	mm
MATERIAL	
DESIGNED	
DRAWN	Y.Aida
CHECKED	S.Ohnuki
APPROVED	K.Enomoto
DATE	Mar.23.1994

MSG RECTANGULAR CONNECTOR (PLUG)

CAT. NO. MSG59P-L11

DRAWING NO. JSC 92831 REV. 2

SOURIAU

TOLERANCES
UNLESS OTHERWISE SPECIFIED: ±0.5

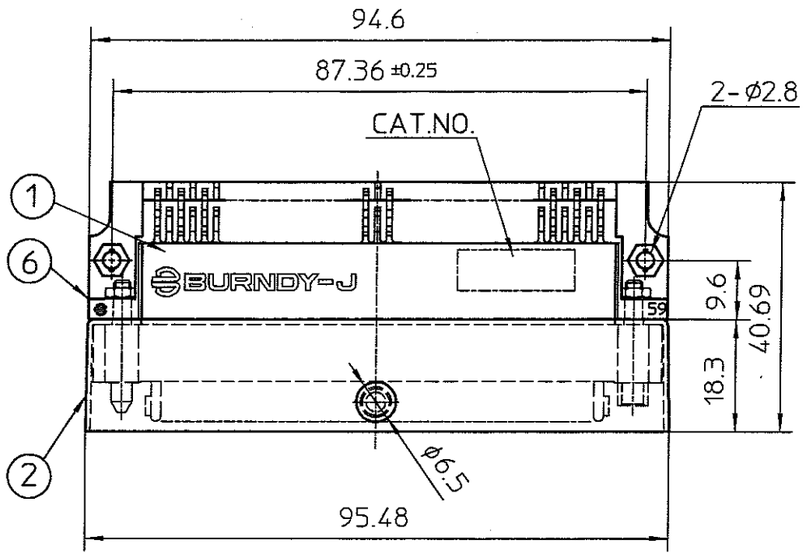

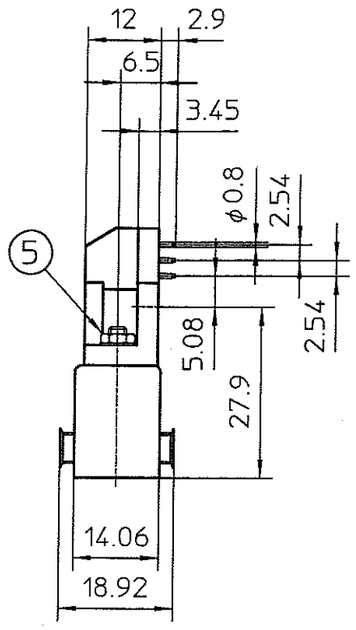

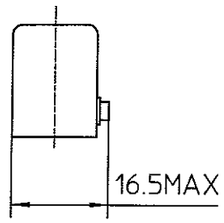

WHEN POLARIZING SCREW IS ATTACHED

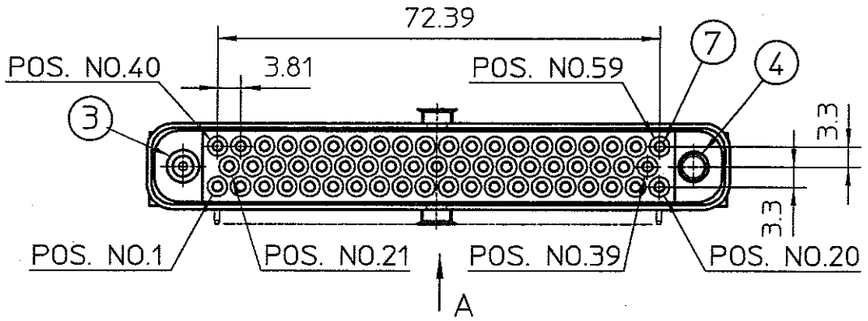

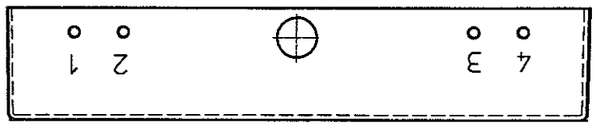

VIEW A

PT.NO.	PARTS NAME	MATERIAL	Q'TY	NOTE
1	INSULATOR	PBT RESIN GLASS REINFORCED	1	COLOR : BLACK
2	SKIRT	STEEL	1	FINISH : NICKEL PLATING
3	GUIDE PIN	STAINLESS	1	
4	GUIDE SOCKET	STAINLESS	1	
5	HEXAGON NUT	STAINLESS	2	
6	LOCATOR	PBT RESIN GLASS REINFORCED	1	COLOR : BLACK
7	CONTACT	BRASS	59	CONTACT AREA : GOLD OVER NICKEL PLATING TERMINAL AREA : SOLDER PLATING

CONTACT MOUNTED	ACCOMMODATION CONTACT
PIN	RC/RCS__M-__D28

11.4.03
SOURIAU
Japan

REV.	DATE	DESCRIPTION		CKD.
3	'03/3/25	CONTCT P/N ADD.(ECN-103015)		H.T
2	'98-12-7	SHAPE CHANGED	T.H	H.T
1	'94-6-7	DIM. CHANGED	M.I	H.T

REFERENCE

SCALE	~~1~~
DIM. IN	mm
MATERIAL	
DESIGNED	
DRAWN	Y.Aida
CHECKED	S.Ohnuki
APPROVED	K.Enomoto
DATE	Mar.23.1994

MSG RECTANGULAR CONNECTOR (RECEPTACLE)

CAT. NO. MSG59RR-L111

DRAWING NO. JSC 92832 REV. 3

SOURIAU

DF-127 REV.B

TOLERANCES
UNLESS OTHERWISE SPECIFIED: ±0.5

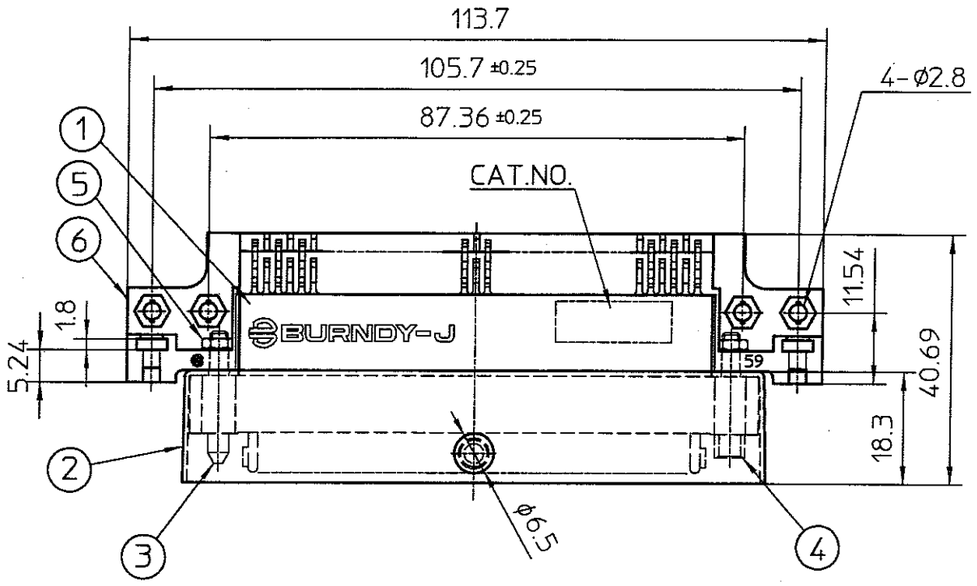

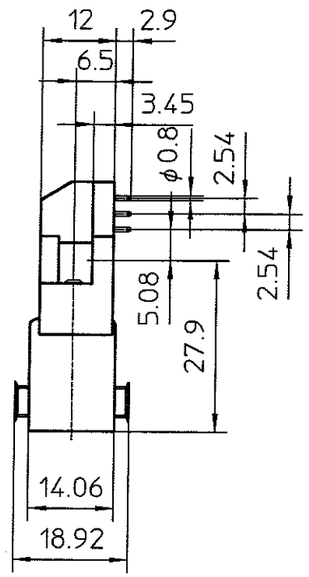

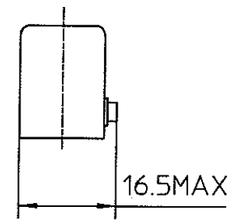

WHEN POLARIZING SCREW IS ATTACHED

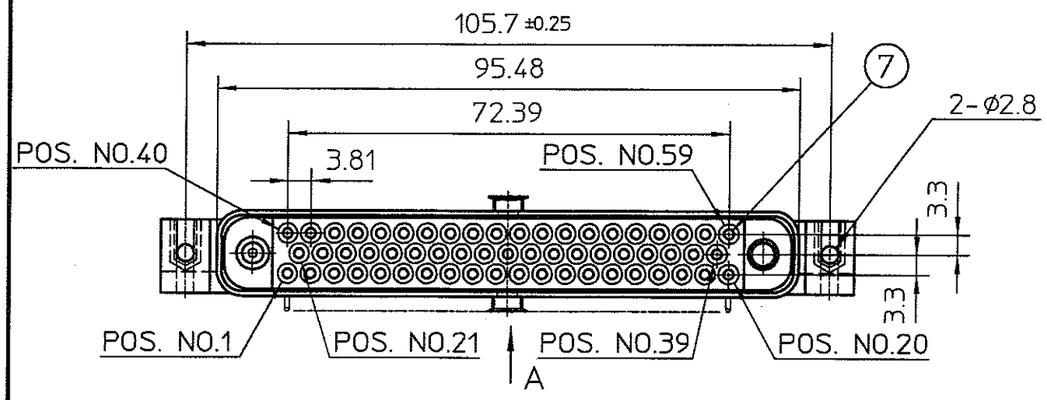

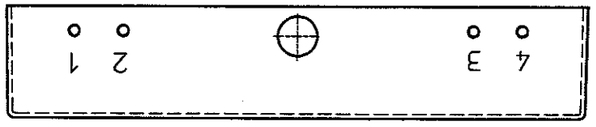

VIEW A

PT.NO.	PARTS NAME	MATERIAL	Q'TY	NOTE
1	INSULATOR	PBT RESIN GLASS REINFORCED	1	COLOR : BLACK
2	SKIRT	STEEL	1	FINISH : NICKEL PLATING
3	GUIDE PIN	STAINLESS	1	
4	GUIDE SOCKET	STAINLESS	1	
5	HEXAGON NUT	STAINLESS	2	
6	LOCATOR	PBT RESIN GLASS REINFORCED	1	COLOR : BLACK
7	CONTACT	BRASS	59	CONTACT AREA : GOLD OVER NICKEL PLATING TERMINAL AREA : SOLDER PLATING

CONTACT MOUNTED	ACCOMMODATION CONTACT
PIN	RC/RCS__M-__D28

SOURIAU Japan

REV.	DATE	DESCRIPTION		CKD.
3	'03/3/25	CONTCT P/N ADD.(ECN-103015)		
2	'98-12-7	SHAPE CHANGED	T.H	H.T
1	'94-6-7	DIM. CHANGED	M.I	H.T

REFERENCE

SCALE	X
DIM. IN	mm
MATERIAL	
DESIGNED	
DRAWN	Y.Aida
CHECKED	S.Ohnuki
APPROVED	K.Enomoto
DATE	Mar.23.1994

MSG RECTANGULAR CONNECTOR (RECEPTACLE)

CAT. NO. MSG59RF-L111

DRAWING NO. JSC 92833 REV. 3

SOURIAU

TOLERANCES
UNLESS OTHERWISE SPECIFIED: ±0.5

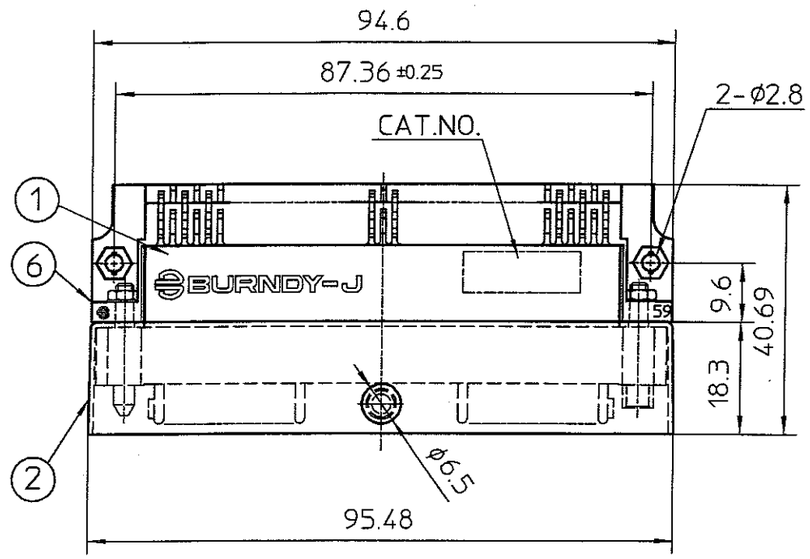

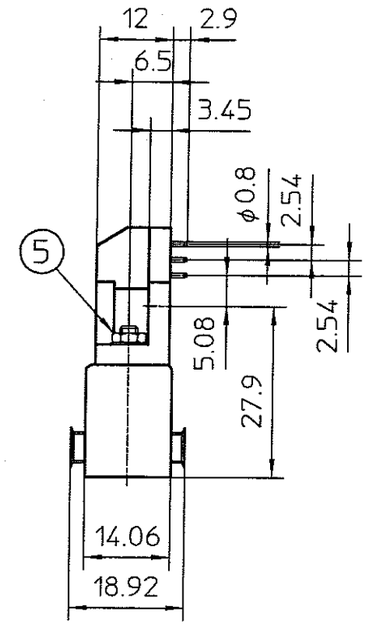

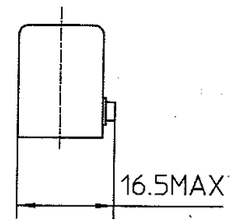

WHEN POLARIZING SCREW IS ATTACHED

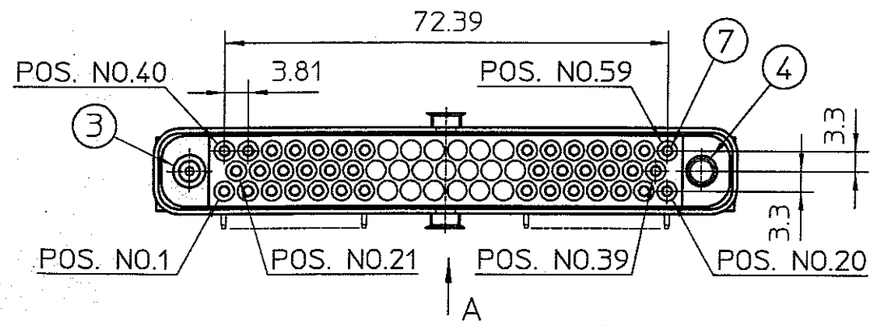

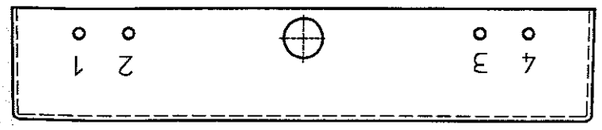

VIEW A

PT.NO.	PARTS NAME	MATERIAL	Q'TY	NOTE
1	INSULATOR	PBT RESIN GLASS REINFORCED	1	COLOR : BLACK
2	SKIRT	STEEL	1	FINISH : NICKEL PLATING
3	GUIDE PIN	STAINLESS	1	
4	GUIDE SOCKET	STAINLESS	1	
5	HEXAGON NUT	STAINLESS	2	
6	LOCATOR	PBT RESIN GLASS REINFORCED	1	COLOR : BLACK
7	CONTACT	BRASS	40	CONTACT AREA : GOLD OVER NICKEL PLATING TERMINAL AREA : SOLDER PLATING

CONTACT MOUNTED POSITION NO.	
1 ~ 7	14~20
21~26	34~39
40~46	53~59

CONTACT MOUNTED	ACCOMMODATION CONTACT
PIN	RC/RCS__M-__D28

'11.4.13
SOURIAU
Japan

REV.	DATE	DESCRIPTION		CKD.
3	'03/3/25	CONTCT P/N ADD.(ECN-103015)	S.O	
2	'98-12-7	SHAPE CHANGED	T.H	H.T
1	'94-6-7	DIM. CHANGED	M.I	H.T

REFERENCE

SCALE	X
DIM. IN	mm
MATERIAL	
DESIGNED	
DRAWN	Y.Aida
CHECKED	S.Ohnuki
APPROVED	K.Enomoto
DATE	Mar.23.1994

MSG RECTANGULAR CONNECTOR (RECEPTACLE)

CAT. NO. MSG59RR-L112

DRAWING NO. JSC 92834 REV. 3

FCI

DF-127 REV.B

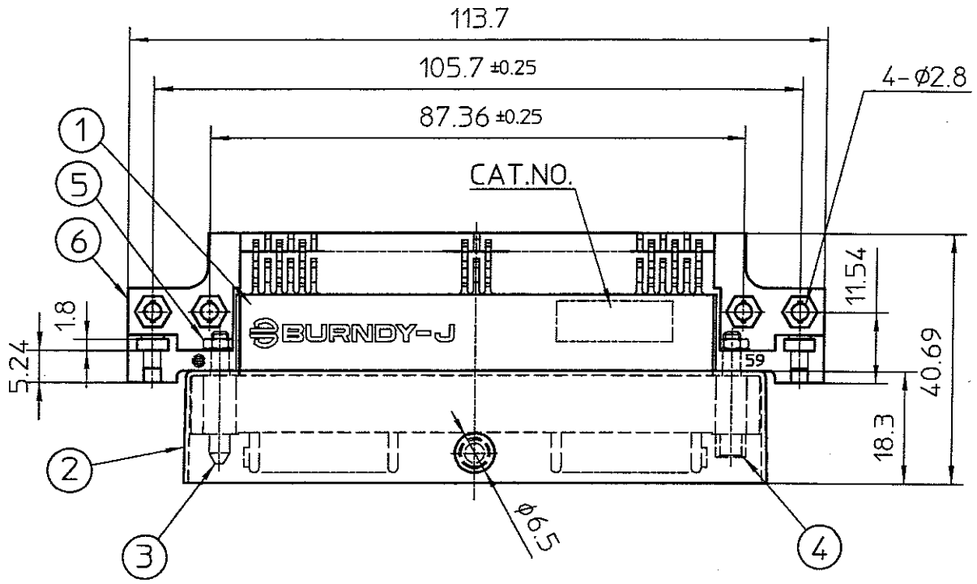

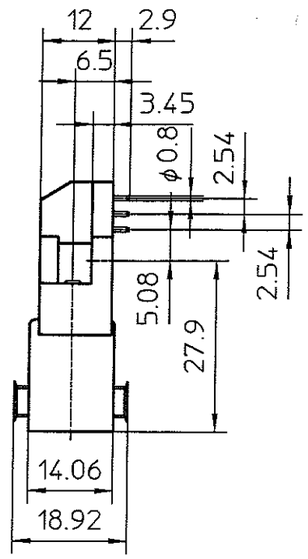

TOLERANCES
UNLESS OTHERWISE SPECIFIED: ±0.5

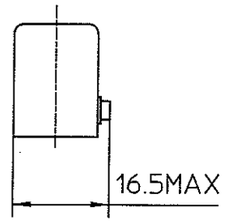

WHEN POLARIZING SCREW IS ATTACHED

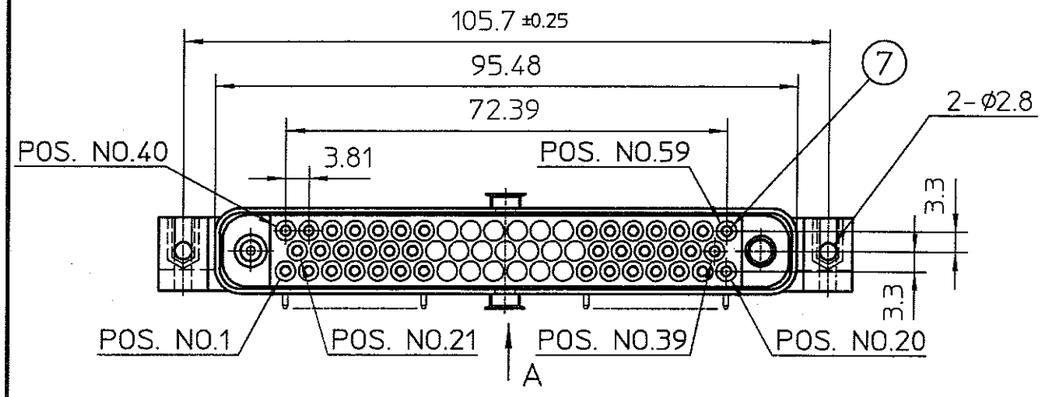

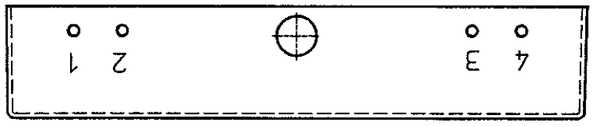

VIEW A

PT.NO.	PARTS NAME	MATERIAL	Q'TY	NOTE
1	INSULATOR	PBT RESIN GLASS REINFORCED	1	COLOR : BLACK
2	SKIRT	STEEL	1	FINISH : NICKEL PLATING
3	GUIDE PIN	STAINLESS	1	
4	GUIDE SOCKET	STAINLESS	1	
5	HEXAGON NUT	STAINLESS	2	
6	LOCATOR	PBT RESIN GLASS REINFORCED	1	COLOR : BLACK
7	CONTACT	BRASS	40	CONTACT AREA : GOLD OVER NICKEL PLATING TERMINAL AREA : SOLDER PLATING

CONTACT MOUNTED POSITION NO.	
1 ~ 7	14~20
21~26	34~39
40~46	53~59

CONTACT MOUNTED	ACCOMMODATION CONTACT
PIN	RC/RCS__M-__D28

'11.4.08
SOURIAU
Japan

REV.	DATE	DESCRIPTION		CKD.
3	'03/3/25	CONTCT P/N ADD.(ECN-103015) 3.0		
2	'98-12-7	SHAPE CHANGED	T.H	H.T
1	'94-6-7	DIM. CHANGED	M.I	H.T

REFERENCE

SCALE	X
DIM. IN	mm
MATERIAL	
DESIGNED	
DRAWN	Y.Aida
CHECKED	S.Ohnuki
APPROVED	K.Enomoto
DATE	Mar.23.1994

MSG RECTANGULAR CONNECTOR (RECEPTACLE)

CAT. NO. MSG59RF-L112

DRAWING NO. JSC 92835 REV. 3

SOURIAU SOURIAU JAPAN K.K

TOLERANCES
UNLESS OTHERWISE SPECIFIED :±0.5

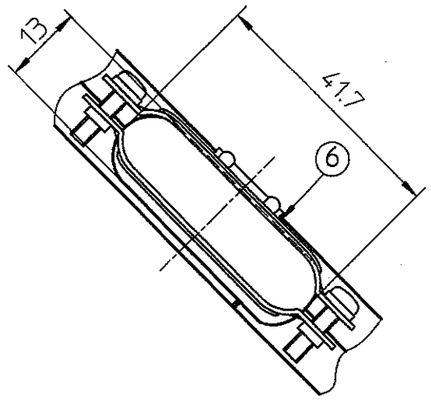

PT. NO.	PARTS NAME	MATERIAL	Q'TY	NOTE
1	INSULATOR	PBT RESIN GLASS REINFORCED	1	COLOR : BLACK
2	LEVER	STAINLESS	1	
3	HOOD	STEEL	2	FINISH : NICKEL PLATING
4	GUIDE PIN	STAINLESS	1	
5	GUIDE SOCKET	STAINLESS	1	
6	CABLE CLAMP BAR	STEEL	1	FINISH : NICKEL PLATING
7	SCREWING SCREW	STEEL	2	SCREW SIZE : M3X12

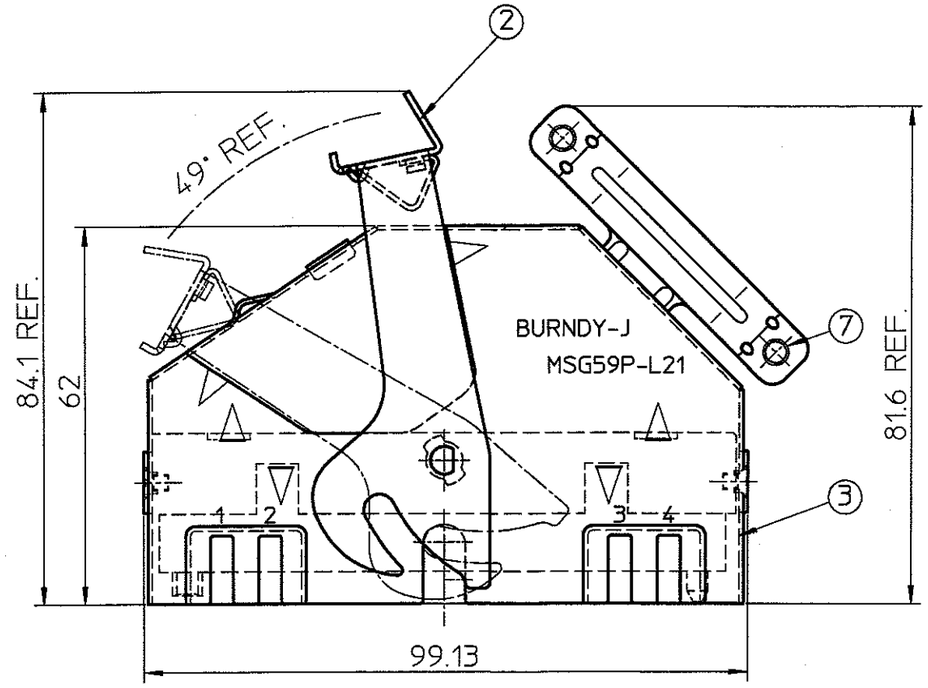

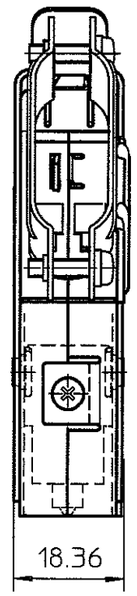

WHEN POLARIZING PLATE IS ATTACHED

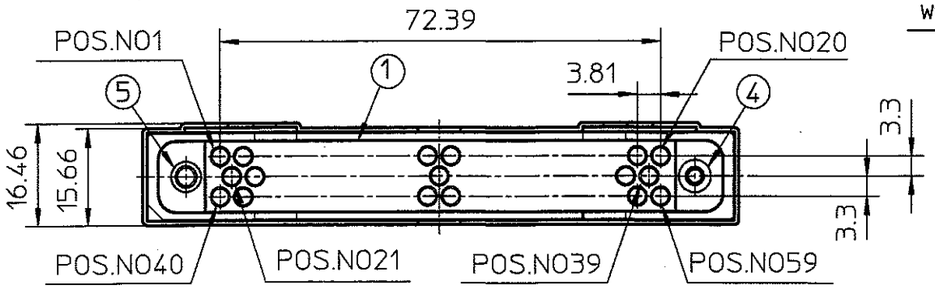

'11.4.08
SOURIAU
Japan

REV.	DATE	DESCRIPTION	CKD.

REFERENCE

SCALE ∝
DIM. IN mm
MATERIAL

DESIGNED
DRAWN J. Harada
CHECKED S. Ohmichi
APPROVED H. Takahashi
DATE Dec. 7, 1998

MSG RECTANGULAR CONNECTOR (PLUG)

CAT. NO. MSG59P-L21

DRAWING NO. JSC 94941 REV. 0

SOURIAU SOURIAU JAPAN K.K

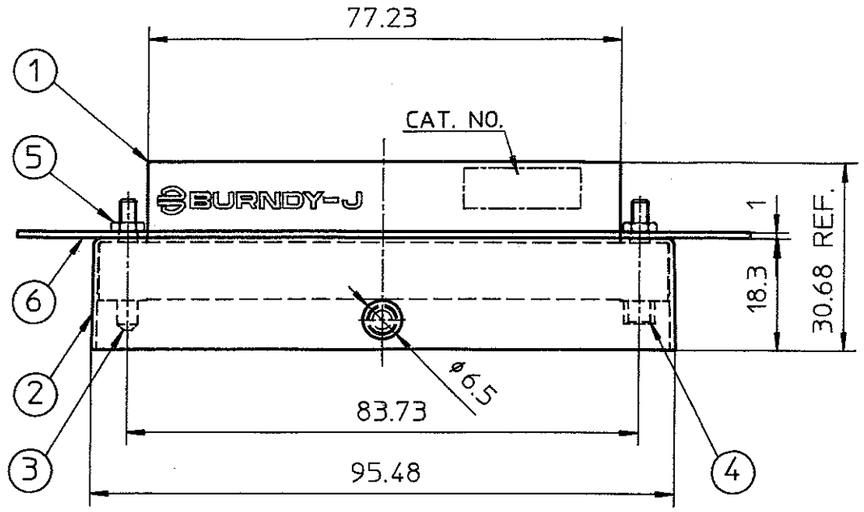

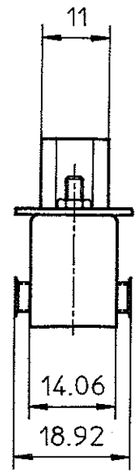

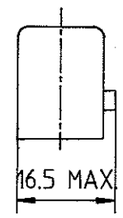

WHEN POLARIZING SCREW IS ATTACHED

PANEL HOLE PATTERN

TOLERANCES
UNLESS OTHERWISE SPECIFIED:±0.5

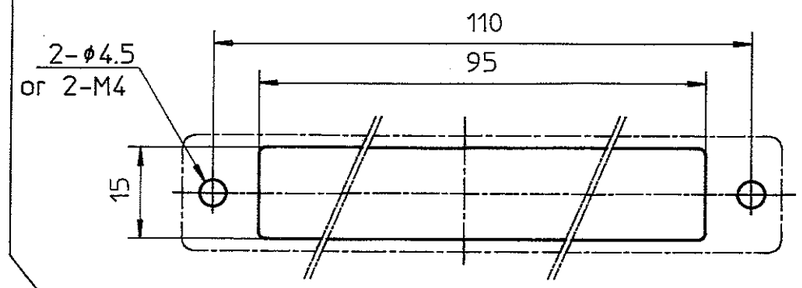

TOLERANCES
UNLESS OTHERWISE SPECIFIED:±0.5

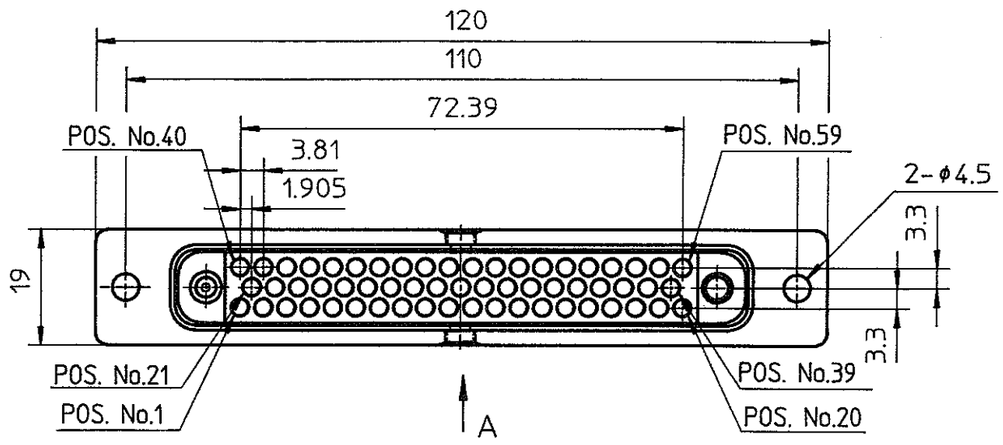

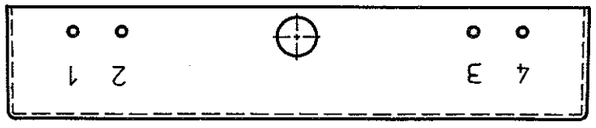

VIEW A

PT.NO.	PARTS NAME	MATERIAL	Q'TY	NOTE
1	INSULATOR	PBT RESIN GLASS REINFORCED	1	COLOR : BLACK
2	SKIRT	STEEL	1	FINISH : NICKEL PLATING
3	GUIDE PIN	STAINLESS	1	
4	GUIDE SOCKET	STAINLESS	1	
5	HEXAGON NUT	STAINLESS	2	No.4-40 UNC
6	BRACKET	STEEL	1	FINISH : NICKEL PLATING

CONTACT MOUNTED	ACCOMMODATION CONTACT
PIN	RM__M-__D28

出荷
'11.4.08
SOURIAU
Japan

REV.	DATE	DESCRIPTION	CKD.

REFERENCE

SCALE X
DIM. IN mm
MATERIAL

DESIGNED R. Ohmuto
DRAWN M. Situka
CHECKED V. Osuga
APPROVED
DATE Oct. 20. 1999

MSG RECTANGULAR CONNECTOR (RECEPTACLE)

CAT. NO. MSG59RP-L110

DRAWING NO. JSC 95214 REV. 0

SOURIAU SOURIAU JAPAN K.K

FILE

PT. NO.	PARTS NAME	MATERIAL	Q'TY	NOTE
1	INSULATOR	PBT RESIN	1	GLASS REINFORCED COLOR : BLACK
2	LEVER	STAINLESS	1	
3	HOOD	STEEL	2	FINISH : NICKEL PLATING
4	POLARIZING KEY	BRASS	2	FINISH : NICKEL PLATING
5	SLIDE PLATE	STAINLESS	2	
6	CABLE CLAMP BAR	STEEL	1	FINISH : NICKEL PLATING
7	SCREWING SCREW	STEEL	2	SCREW SIZE : M3X12

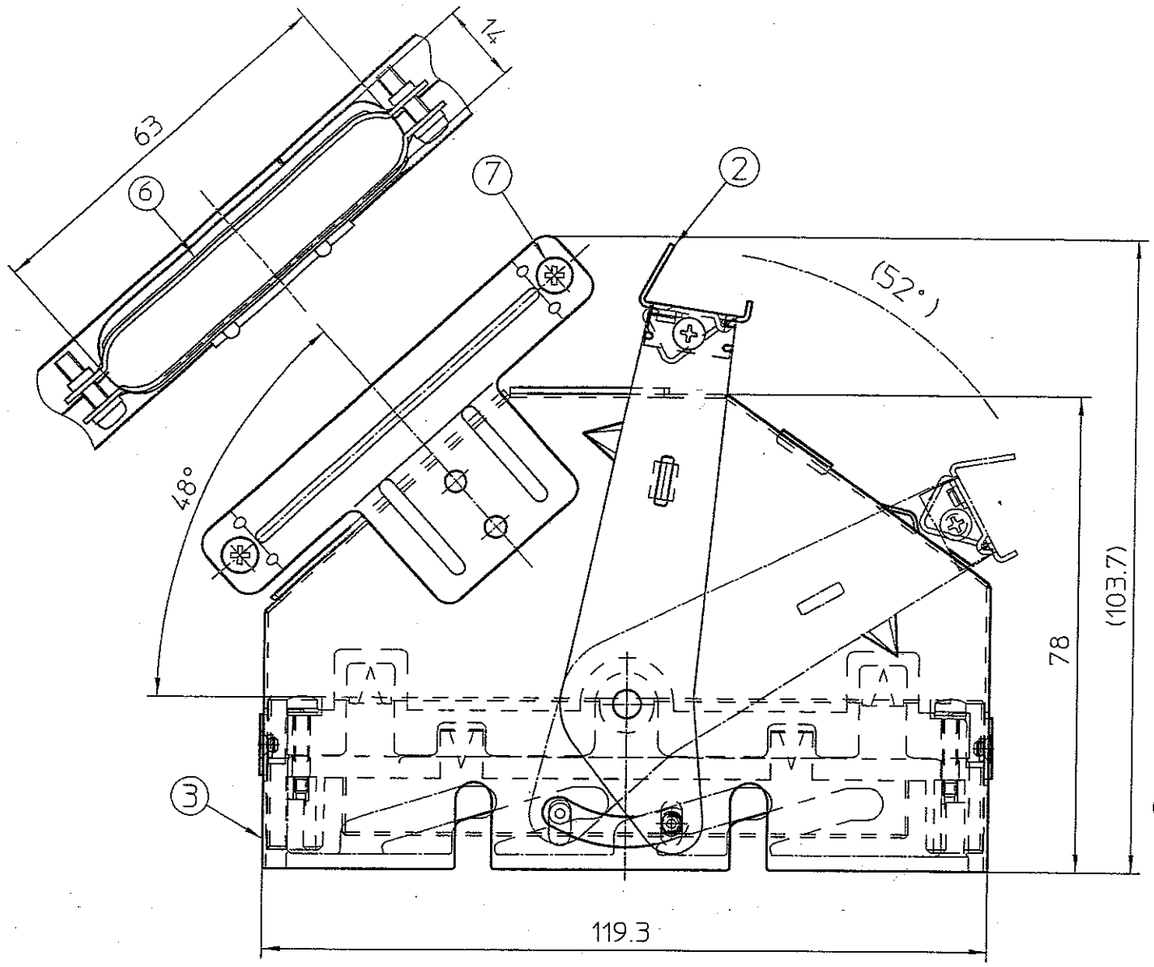

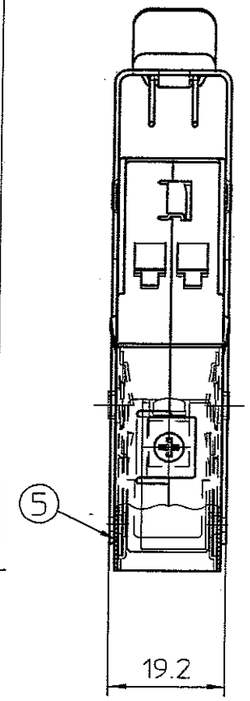

TOLERANCES
UNLESS OTHERWISE SPECIFIED : ±0.5

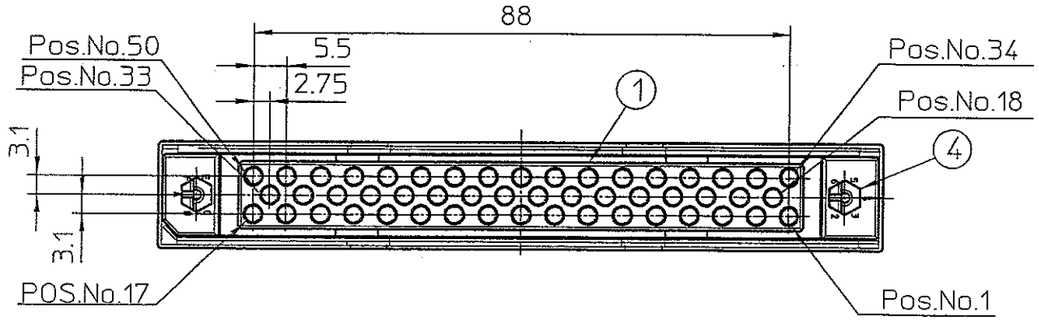

'11.4.08
SOURIAU
Japan

REV.	DATE	DESCRIPTION	CKD.
1	04 1-13	Hood design change	

REFERENCE

SCALE	X
DIM. IN	mm
MATERIAL	
DESIGNED	'03-8-11
DRAWN	S.Ohnuki
CHECKED	'03-8-11
APPROVED	M.Ishii
DATE	

MSG RECTANGULAR CONNECTOR (PLUG)

CAT. NO. MSG50P-L21

DRAWING NO. IJSC 00091 REV. 1

SOURIAU Japan K.K.

TOLERANCES
UNLESS OTHERWISE SPECIFIED: ±0.5

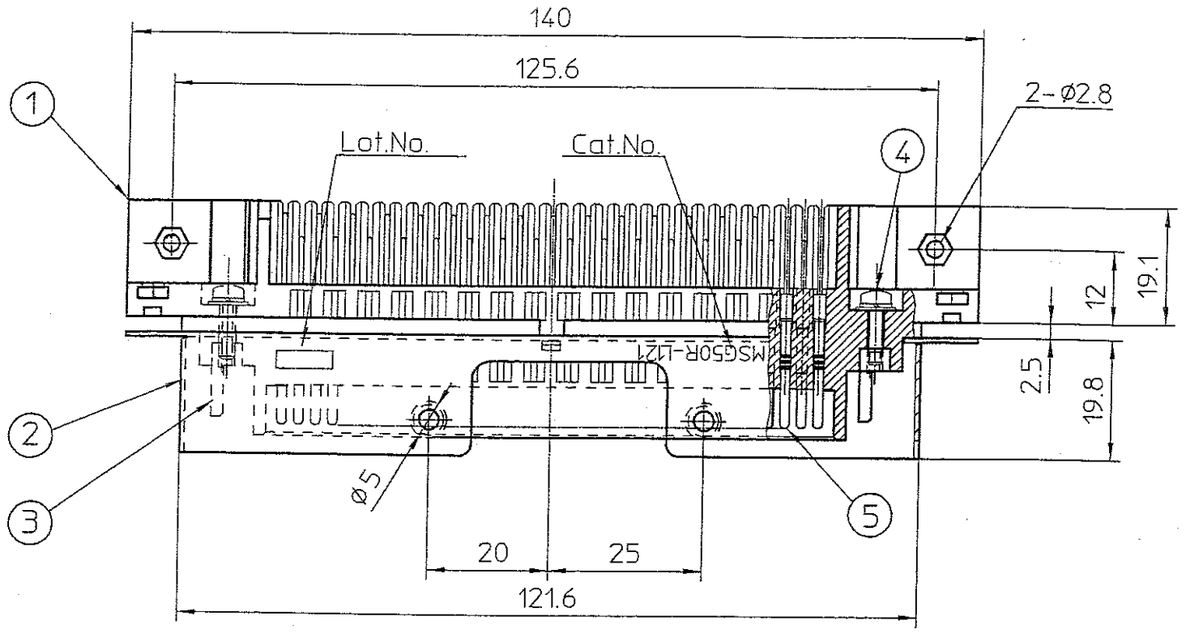

PT.NO.	PARTS NAME	MATERIAL	Q'TY	NOTE
1	INSULATOR	PBT RESIN	1	GLASS REINFORCED / COLOR : BLACK
2	SKIRT	STEEL	1	FINISH : NICKEL PLATING
3	POLARIZING KEY	BRASS	2	FINISH : NICKEL PLATING
4	SCREW	STEEL	2	FINISH : NICKEL PLATING
5	CONTACT	BRASS	50	CONTACT AREA : GOLD 0.75 μm MIN. OVER NICKEL PLATING TERMINAL AREA : SOLDER PLATING

CONTACT MOUNTED	ACCOMMODATION CONTACT
PIN	RCS__M-__D28

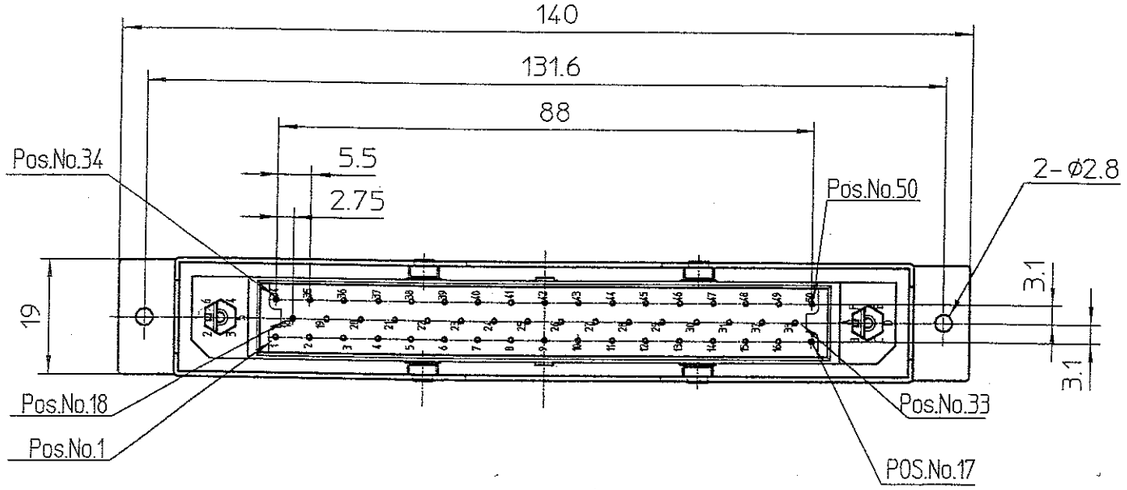

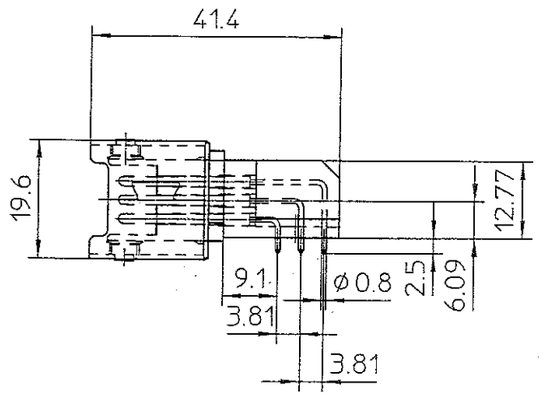

'11.4.08
SOURIAU
Japan

REV.	DATE	DESCRIPTION	CKD.

REFERENCE

SCALE	X	DESIGNED	'03-8-11
DIM. IN	mm	DRAWN	
MATERIAL		CHECKED	
		APPROVED	
		DATE	03-8-11

MSG RECTANGULAR CONNECTOR (RECEPTACLE)

CAT. NO. MSG50RF-L121

DRAWING NO.	REV.
IJSC 00092	0

SOURIAU Japan K.K.

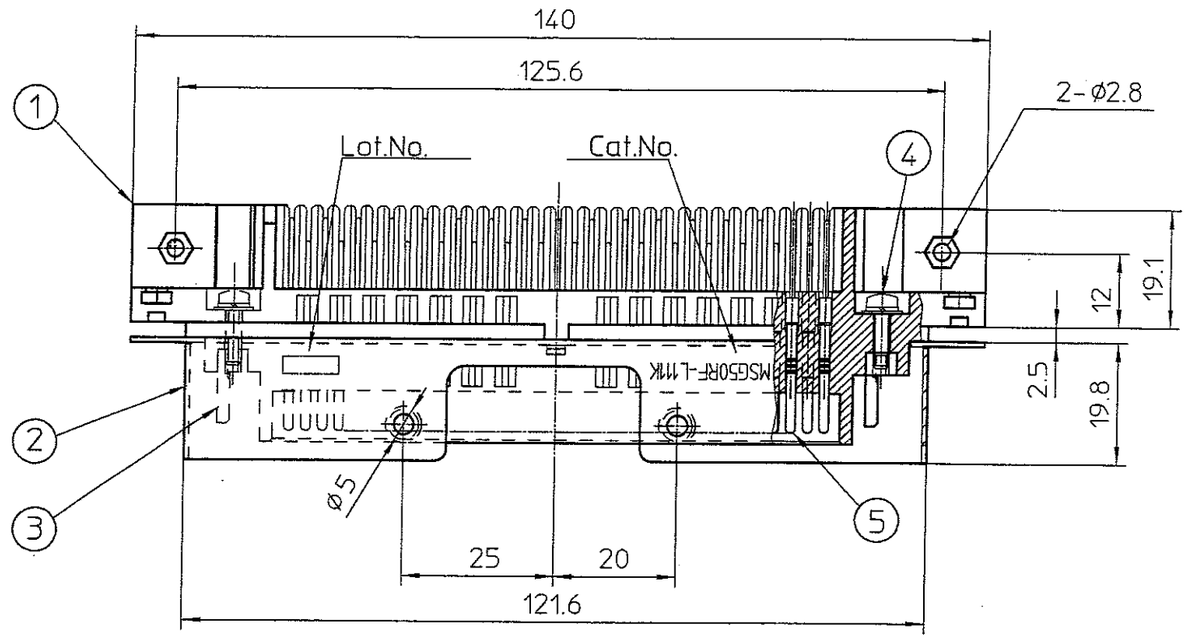

TOLERANCES
UNLESS OTHERWISE SPECIFIED: ±0.5

PT.NO.	PARTS NAME	MATERIAL	Q'TY	NOTE
1	INSULATOR	PBT RESIN	1	GLASS REINFORCED / COLOR : BLACK
2	SKIRT	STEEL	1	FINISH : NICKEL PLATING
3	POLARIZING KEY	BRASS	2	FINISH : NICKEL PLATING
4	SCREW	STEEL	2	FINISH : NICKEL PLATING
5	CONTACT	BRASS	50	GOLD 0.75 μm MIN. OVER NICKEL PLATING

CONTACT MOUNTED	ACCOMMODATION CONTACT
PIN	RCS__M-__D28

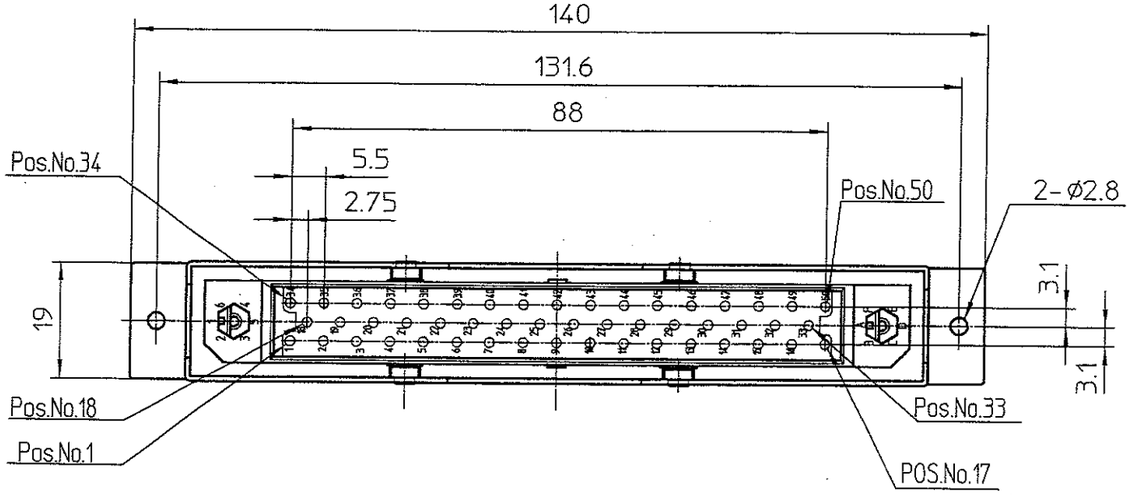

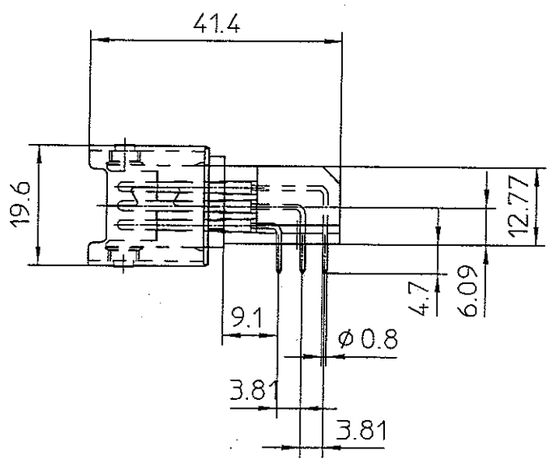

REV.	DATE	DESCRIPTION	CKD.

REFERENCE

SCALE	X	DESIGNED	'04-2-24
DIM. IN	mm	DRAWN	
MATERIAL		CHECKED	
		APPROVED	
		DATE	'04. 2-26

MSG RECTANGULAR CONNECTOR (RECEPTACLE)

CAT. NO. MSG50RF-L111K

DRAWING NO. IJSC 00122 REV. 0

SOURIAU Japan K.K.

'11.4.08 SOURIAU Japan

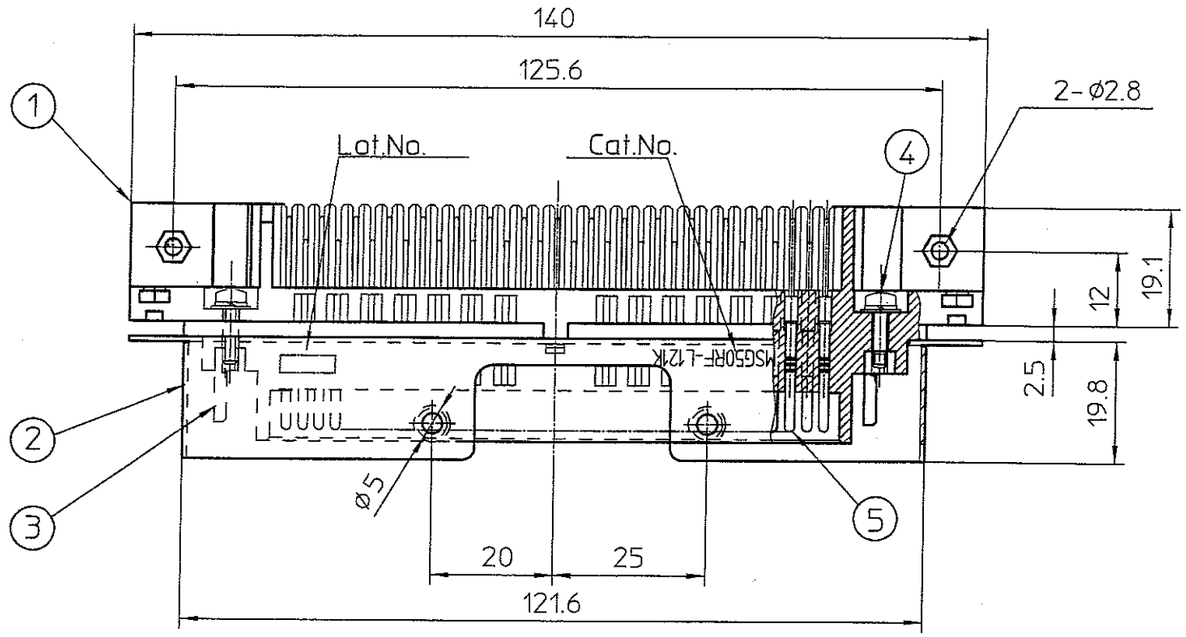

TOLERANCES
UNLESS OTHERWISE SPECIFIED: ±0.5

PT.NO.	PARTS NAME	MATERIAL	Q'TY	NOTE
1	INSULATOR	PBT RESIN	1	GLASS REINFORCED / COLOR : BLACK
2	SKIRT	STEEL	1	FINISH : NICKEL PLATING
3	POLARIZING KEY	BRASS	2	FINISH : NICKEL PLATING
4	SCREW	STEEL	2	FINISH : NICKEL PLATING
5	CONTACT	BRASS	50	GOLD 0.75 μm MIN. OVER NICKEL PLATING

CONTACT MOUNTED	ACCOMMODATION CONTACT
PIN	RCS__M-__D28

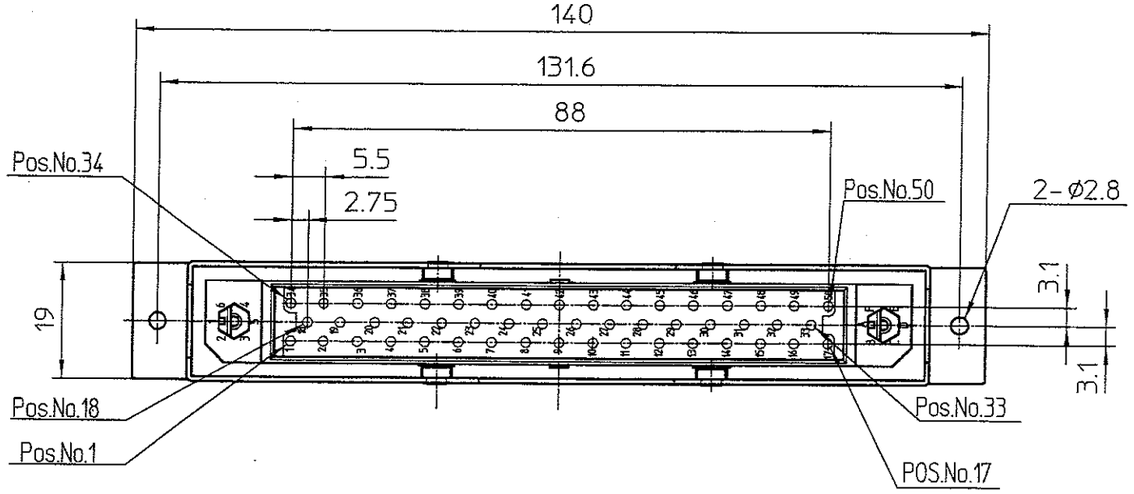

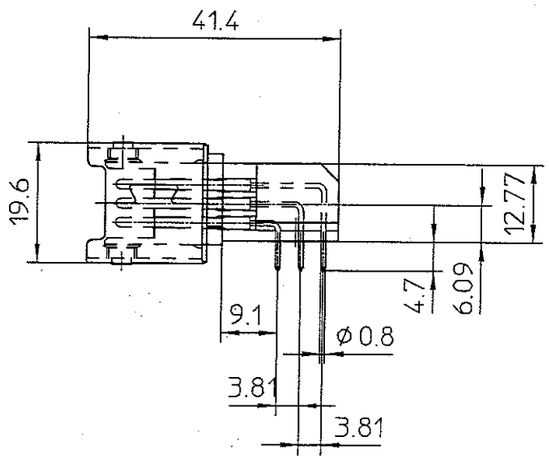

'11.4.08
SOURIAU
Japan

REV.	DATE	DESCRIPTION	CKD.

REFERENCE

SCALE	X	DESIGNED	'04-2-24
DIM. IN	mm	DRAWN	T. Ohnuki
MATERIAL		CHECKED	
		APPROVED	
		DATE	'04-2-25

MSG RECTANGULAR CONNECTOR (RECEPTACLE)

CAT. NO. MSG50RF-L121K

DRAWING NO. IJSC 00123 REV. 0

SOURIAU SOURIAU Japan K.K.